Strainer waste with control handle - Dark Chrome

ELIO

10 710 970

Fits: ELIO, MEM, TARA, TARA ULTRA, META SQUARE

- control for single basin
- including adapter for Bowden cable

Not compatible with brushed stainless steel kitchen sinks 38 XXX 004-86.

Fits ELIO, ENO, MEM, META SQUARE, SYNC, TARA and TARA ULTRA

Dark Chrome	10 710 970-19
Chrome	10 710 970-00
Brushed Platinum	10 710 970-06
Platinum	10 710 970-08
Durabrass (23kt Gold)	10 710 970-09
Brushed Durabrass (23kt Gold)	10 710 970-28
Matte Black	10 710 970-33
Brushed Champagne (22kt Gold)	10 710 970-46
Champagne (22kt Gold)	10 710 970-47
Brushed Chrome	10 710 970-93
Brushed Dark Platinum	10 710 970-99

We reserve the right to change designs, product range and technical specifications without prior notice.
More information can be found at: www.dornbracht.com +49 (0) 2371 8899 900 mail@dornbracht.com

Strainer waste with control handle - Dark Chrome

ELIO

10 710 970

mm [inches]

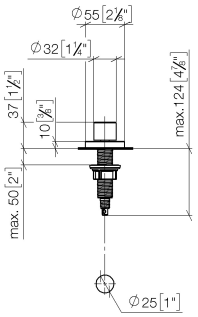

Strainer waste with control handle - Dark Chrome

ELIO

10 710 970
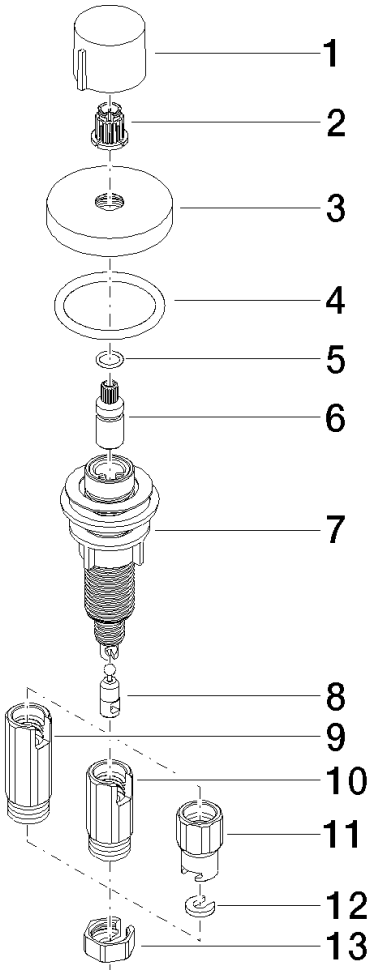
Parts for other finishes can be found here: Chrome